USER´S MANUAL
BEDIENUNGSANLEITUNG
MANUEL D´UTILISATION
MANUAL DE USUARIO
INSTRUKCJA OBSŁUGI
MANUALE D´USO

DEFENDER®



DEFENDER® MINI

TABLE OF CONTENTS

SAFETY INFORMATION	page 3
GENERAL DESCRIPTION	page 4
CARE AND MAINTENANCE	page 4
SETUP	page 5
DETAILED DESCRIPTION OF DEFENDER® MINI	page 6
REPLACEMENT PARTS AND ACCESSORIES	page 8
DISPOSAL	page 8
LIMITED WARRANTY	page 9
LIMITATION OF LIABILITY	page 10
REQUESTING WARRANTY-SERVICE	page 10

Always up-to-date online at: defender-protects.com

SAFETY INFORMATION

All cable crossovers in the DEFENDER® SERIES are designed to protect cables of all types against damage, and visitors as well as operators from injuries by tripping. To ensure these goals, the following safety instructions for use of the cable protectors must be observed:

- This user's manual is an integral part of the product and must be read carefully before use.
- DEFENDER® cable crossovers may only be used in accordance with their intended purposes and maximum load-bearing capacity. Valid parameters can be found in the detailed description of the respective product variant.
- DEFENDER® cable crossovers are designed for use on firm and level ground. The load specified in the detailed descriptions is achieved only on level and solid ground. Load-bearing capacity may be greatly reduced on uneven or soft ground.
- Please note that additional markings / hazard warnings or even permits may be required when using cable crossovers on public thoroughfares, walkways, etc.
- Use DEFENDER® cable crossovers only with original replacement parts and accessories.



HAZARD
Incorrect insulation Life-threatening danger due to electric shock ➔ Only use cables that comply with the prescribed installation regulations with regard to voltage, current, insulation material, load capacity, etc.



Caution! Tripping hazard.

ESPECIALLY IMPORTANT:

- **Do not modify the product in ANY way. Modifications to the DEFENDER® cable protector change the product's characteristics, reduce its protective effect, and lead to a loss of the warranty.**
- **Do NOT bridge over ANY ditches, shafts, stairs, or similar depressions.**
- **Do NOT support pedestals, scaffolding, beams, and similar on the cable protectors.**
- **Do NOT run rigid gas lines in the cable protectors.**
- **Do NOT run cables with a voltage >500V in the cable protectors.**
- **Fill the cable ducts up to a max. of 70% to the underside of the cover.**

To ensure that the trip protection does not itself become a tripping hazard:

- Connect the cable protectors in complete sections.
- Check that the connectors are flush for each installation.
- Check that the lid closures function for each installation.
- Make sure that the lid closure snaps securely into the base.
- Keep the hinge area and lid closure clean.
- Remove any excess lubricant from the hinges after care.
- In outdoor areas, only lay black cable bridges alternately with the yellow cable bridges to avoid the risk of tripping.

GENERAL DESCRIPTION

Cable protectors are used to protect floor cables that are not permanently installed, for example at trade shows, markets and in the event industry. Cable protectors are used to prevent people from tripping.

You have chosen the DEFENDER® SERIES and thus made the best choice when it comes to protecting your cables and people. DEFENDER® cable protectors are characterised by:

- TÜV SÜD-certified safety
- DEKRA Test Certificate for CP65 and TSCA
- Certified safety: UL94 (HB/V-2) & EN 13 501-1 (E)
- Patented with self-cleaning hinge (EU Patent No.: EP1366550)
- Development and production in Germany
- Stringent raw material and production controls
- Very stable, tear-resistant and 100% recyclable plastic
- Resistance to oil, acid and petrol
- Temperature resistance from -30°C to +60°C
- A shore A hardness of 88 ± 4
- A wide range of product variants with coordinated system elements
- A wide range of uses, from construction sites to offices

CARE AND MAINTENANCE

All cable protectors in the DEFENDER® SERIES are made of extremely sturdy, non-breakable plastic (TPU). The protectors can be easily cleaned, even using a steam jet cleaner. In order to ensure trouble-free functioning, however, the hinge area and the lid closure should always be kept clean; slightly lubricate hinges and closure on a regular basis. For this, we recommend using DEFENDER® Pro Service Maintenance Spray. Wipe off excess lubricant after application to avoid any risk of slipping.

SETUP

The cable protectors from the DEFENDER® series are easy and safe to set up. Surfaces, edges and corners are designed in such a way that there is no danger of injury. Cable protectors with a weight up to 20 kg can be transported safely by one person. Cable protectors weighing more than 20 kg can be transported safely by two people.

Each cable crossover has connectors and corresponding sockets that enable you to connect cable crossovers in the same series endlessly with one another. Generally, sections are stable enough to be walked on or driven over without any additional precautions. To find the right cable crossover for your respective requirements, please see the attached detailed product description for the load-bearing capacity and use.

For the product versions DEFENDER® 3 AND ULTRA L 2, special holes for floor anchoring are provided. If complete sections from these product variants are exposed to increased requirements, so that there is a risk of the section shifting during use, we recommend additionally anchoring the section to the ground or floor. Please note that additional markings / hazard warnings or even permits may be required when using cable crossovers on public thoroughfares, walkways, etc.

The load-bearing capacity specified in the detailed descriptions is achieved only on level and solid ground. Load-bearing capacity may be greatly reduced on uneven or soft ground. In such cases, you should conduct appropriate load tests before using the crossover. We guarantee the load-bearing capacity of our cable protectors only with proper use of unmodified products on firm and level ground.

DEFENDER® cable protectors help protect pipes (e.g. water/sewage) and low voltage cables up to 500 V (e.g. communication/control cables/power supply). The cable protectors are NOT suitable for rigid gas pipes.

When using fragile couplings and connectors within the connected section, make sure there is sufficient space to either side and above. Each user is responsible for the manner of installation and selection of cables to be protected with the help of the DEFENDER® cable crossovers.

After installation (except for the COMPACT and OFFICE models), the lids can be opened by pulling them upward. They snap into the open position automatically and stay open until you close them again, thus making it easier to run your cables. After running your cables, close the lid. When doing so, make certain that the lid closure snaps into the base securely. This is the only way to ensure that the lid stays closed under load.

DEFENDER® MINI

The little one within the big ones. Light, professional, and universally usable. The new DEFENDER® MINI meets all expectations when it comes to a professional cable protection system and expands the DEFENDER® series with a compact, very lightweight (nur 6 kg!), and transversable cable protector in a standard black/yellow design. Like all other cable protectors in the DEFENDER® series, the DEFENDER® MINI is resistant to oil, gasoline, and brief contact with solvents and also features the patented self-cleaning hinge closure.

MINI / MINI BLK / MINI LUX	1005 x 290 x 50 mm	Weight: 6 kg
Load-bearing capacity:		
Tons (Area 20 x 20 cm)	Channel filling level	
1.2 t	25.2 mm	
2.0 t	19.8 mm	
Areas of use: Exhibitions / walkways / marketplaces / Christmas markets / workshops / warehouses / shopping centers / department stores / etc.		



85200 **85200BLK** **85200LUX**

DEFENDER® MIDI 5 2D TO MINI ADAPTER



869300 AE 2 M (male)



869300 AE 2 F (female)

ENGINEERING DRAWING

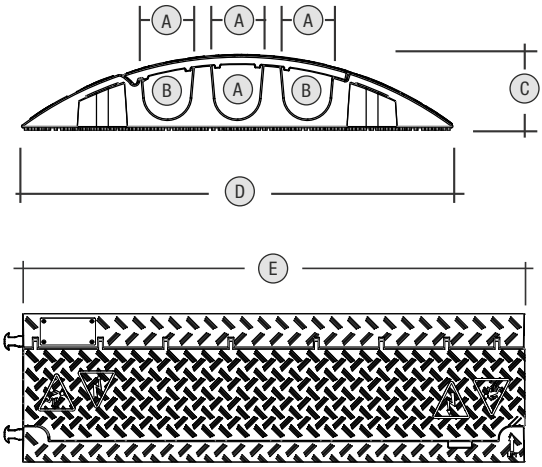

A	35 mm / 1.4"
B	30 mm / 1.2"
C	50 mm / 2.0"
D	290 mm / 11.4"
E	1045 mm / 41.14"

Accessories:



85210L2 / 85210L2BLK
DEFENDER® MINI C MK2 LEFT



85210R2 / 85210R2BLK
DEFENDER® MINI C MK2 RIGHT



85208M
DEFENDER® MINI END RAMP MALE



85208F
DEFENDER® MINI END RAMP FEMALE

REPLACEMENT PARTS AND ACCESSORIES

The DEFENDER® SERIES consists of a wide range of product variants with coordinated system elements, and covers applications from construction sites to offices.

A selection of frequently used system elements can be found in the respective detailed description of this user's manual.

A complete list of system elements, replacement parts and accessories can be found at http://www.defender-protects.com

DISPOSAL

All cable protectors in the DEFENDER® SERIES are made of extremely sturdy, non-breakable plastic (thermoplastic polyurethane). Polyurethane is a valuable raw material, 100% recyclable and is not considered hazardous waste, thus it is not subject to any specific disposal requirements. The cable protectors will be accepted either by recycling centres and recycling yards or other landfills and waste incinerators.

LIMITED WARRANTY

This warranty extends to the DEFENDER® branded product you purchased from Adam Hall. The statutory warranty rights against the vendor shall not be affected by this warranty. Rather, this warranty gives you additional independent claims against Adam Hall.

With this warranty, Adam Hall ensures that products you have purchased from Adam Hall or Adam Hall partners, under normal use, are free of defects in material or workmanship for a period of 5 years from the date of purchase. The warranty period begins on the date of purchase. In order to assert a claim for warranty service, the proof of date of purchase is provided by the receipt bearing the date of purchase or the date of purchase on the delivery note. You are entitled to warranty service under the conditions and provisions set out in this document, if a repair within the warranty period is required.

This warranty applies only to the original purchaser of the products supplied by Adam Hall and is not transferable to any person to whom the property is transferred by the original purchaser.
Within the warranty period, the defective parts or the product from Adam Hall will be repaired or replaced. Under the terms of this warranty, all the replaced or removed components become the property of Adam Hall.

In the unlikely event that a product acquired from Adam Hall, repeatedly exhibits a defect, Adam Hall may decide, at its discretion, to replace this product with a comparable product of at least the same performance.

Adam Hall does not guarantee that the operation of this product will be uninterrupted or error-free. Adam Hall accepts no responsibility for any damage due to incorrect compliance with the instructions received in the delivery.

This warranty does not extend to:
- wearing parts (eg battery, tubes).
- devices that have had their serial number removed or damaged, or failed as a result of an accident
- inappropriate or abusive use or other external causes
- devices that were not used in accordance with the operating parameters defined in the user documentation shipped with the product
- devices that have been repaired using parts not made or distributed by Adam Hall
- devices that have been serviced, modified or repaired by someone other than Adam Hall or an authorised service partner.

These terms and conditions constitute the complete and exclusive warranty agreement between you and Adam Hall regarding the Adam Hall branded product you have purchased.

This warranty is valid only within Europe. Outside of Europe please contact our official distributors.

LIMITATION OF LIABILITY

If your Adam Hall branded hardware product fails to work as warranted above, your sole and exclusive remedy shall be repair or replacement. Adam Halls' maximum liability under this limited warranty is expressly limited to the lesser of the price you have paid for the product or the cost of repair or replacement of any hardware components that malfunction in conditions of normal use.

Adam Hall is not liable for any damages caused by the product or the failure of the product, including any lost profits or savings or special, incidental, or consequential damages. Adam Hall is not liable for any claim made by a third party or made by you for a third party.

This limitation of liability applies whether damages are sought, or claims are made, under this Limited Warranty or as a tort claim (including negligence and strict product liability), a contract claim, or any other claim. This limitation of liability cannot be waived or amended by any person. This limitation of liability will be effective even if you have advised Adam Hall of an authorized representative of Adam Hall of the possibility of any such damages. This limitation of liability however, will not apply to claims for personal injury.

This Limited Warranty gives you specific legal rights. You may also have other rights that may vary from state to state or from country to country. You are advised to consult applicable state or country laws for a full determination of your rights.

REQUESTING WARRANTY-SERVICE

To request warranty service for the product, contact Adam Hall GmbH, Adam-Hall-Str. 1, 61267 Neu Anspach (Germany) / Email: Info@adamhall.com / +49 (0)6081 / 9419-0 or the Adam Hall authorized reseller from which you purchased the product.

Important
Slight discolouration of material and metallic sheen result from the halogen-free fl ame retardant additives and the recycled materials. They cannot be considered as a defect.

DEFENDER® MINI

DEFENDER-PROTECTS.COM

Adam Hall GmbH | Adam-Hall-Str. 1 | 61267 Neu-Anspach | Germany
Phone: +49 6081 9419-0 | mail@adamhall.com | **adamhall**.com

REV: 06